GROHE

FAUCET TECHNOLOGY

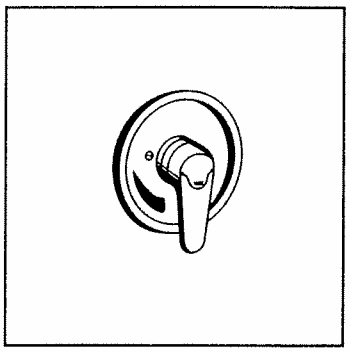

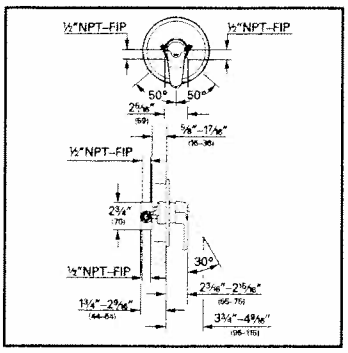

DESCRIPTION	COLOR	PRODUCT NO.
Eurowing Shower Valve Lever handle design Ceramic cartridge Single handle mixing valve	**Chrome** **Polished Brass** **White**	**33 625 000** **33 625 R00** **33 625 L00**

Requires twin ell 03.671 for shower/tub combinations with diverter spout (not included)

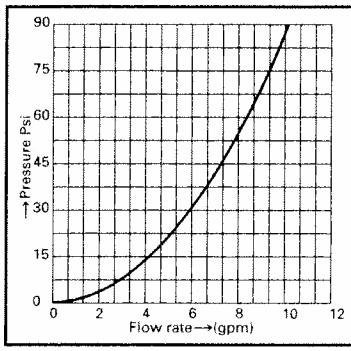

Pressure loss curve without downstream resistance.

Psi	15	30	45	60	75	90
g/min.	4.2	5.9	7.2	8.4	9.4	10.2

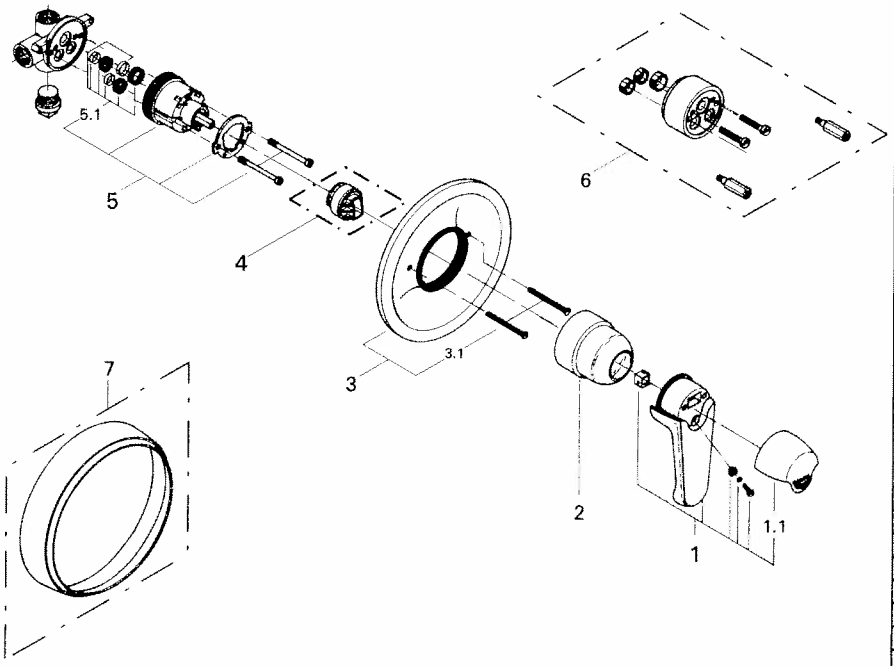

Pos. No.	Spare part Description	Product No.	Pcs.
	33625		
1	Lever set	46125	1
1.1	Cover cap	46126	1
2	Cap	01124	1
3	Escutcheon	46062	1
3.1	Screw	00968	1
4	Handle rotation stop	46153	1
5	Cartridge	46048	1
5.1	Seal kit	46209	1
	Special accessories		
6	1" Extension	46120	1
7	Intermediate ring 7/8" high	46035	1
	(for shallow wall application)		